1

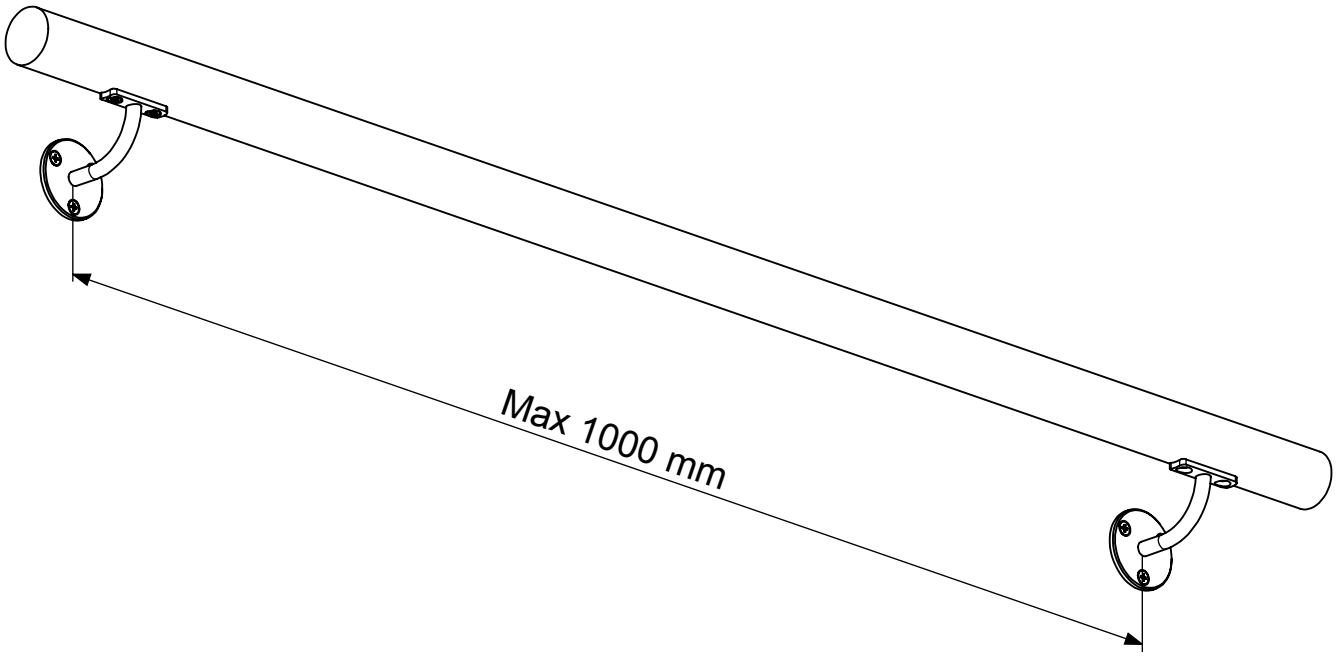

2

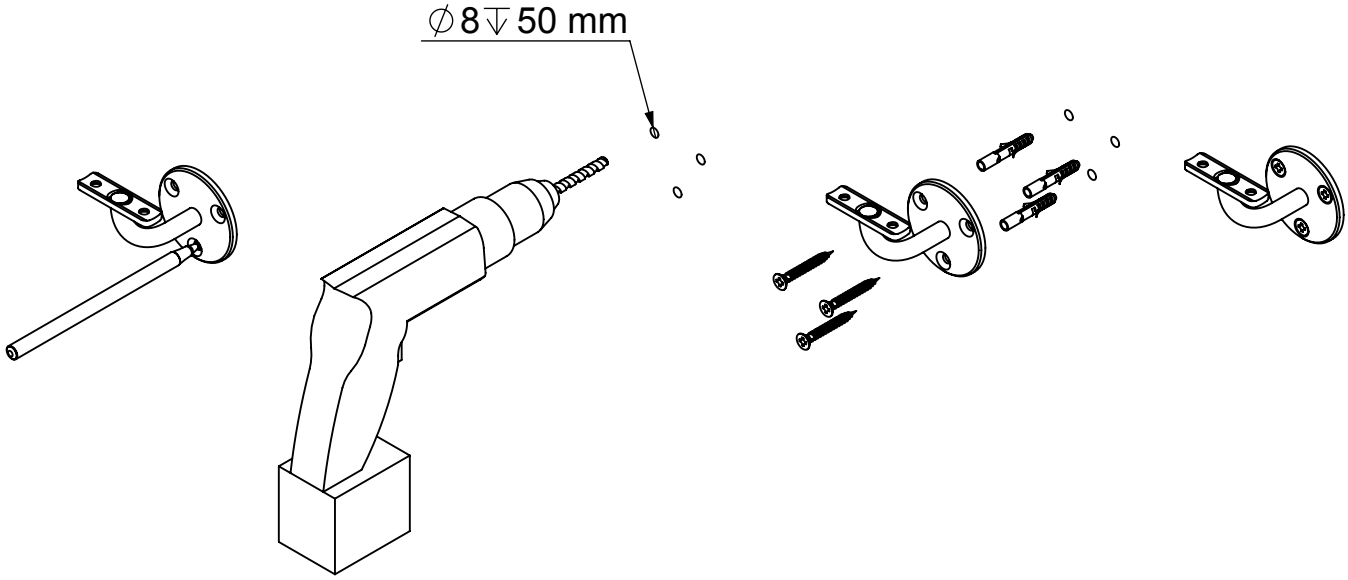

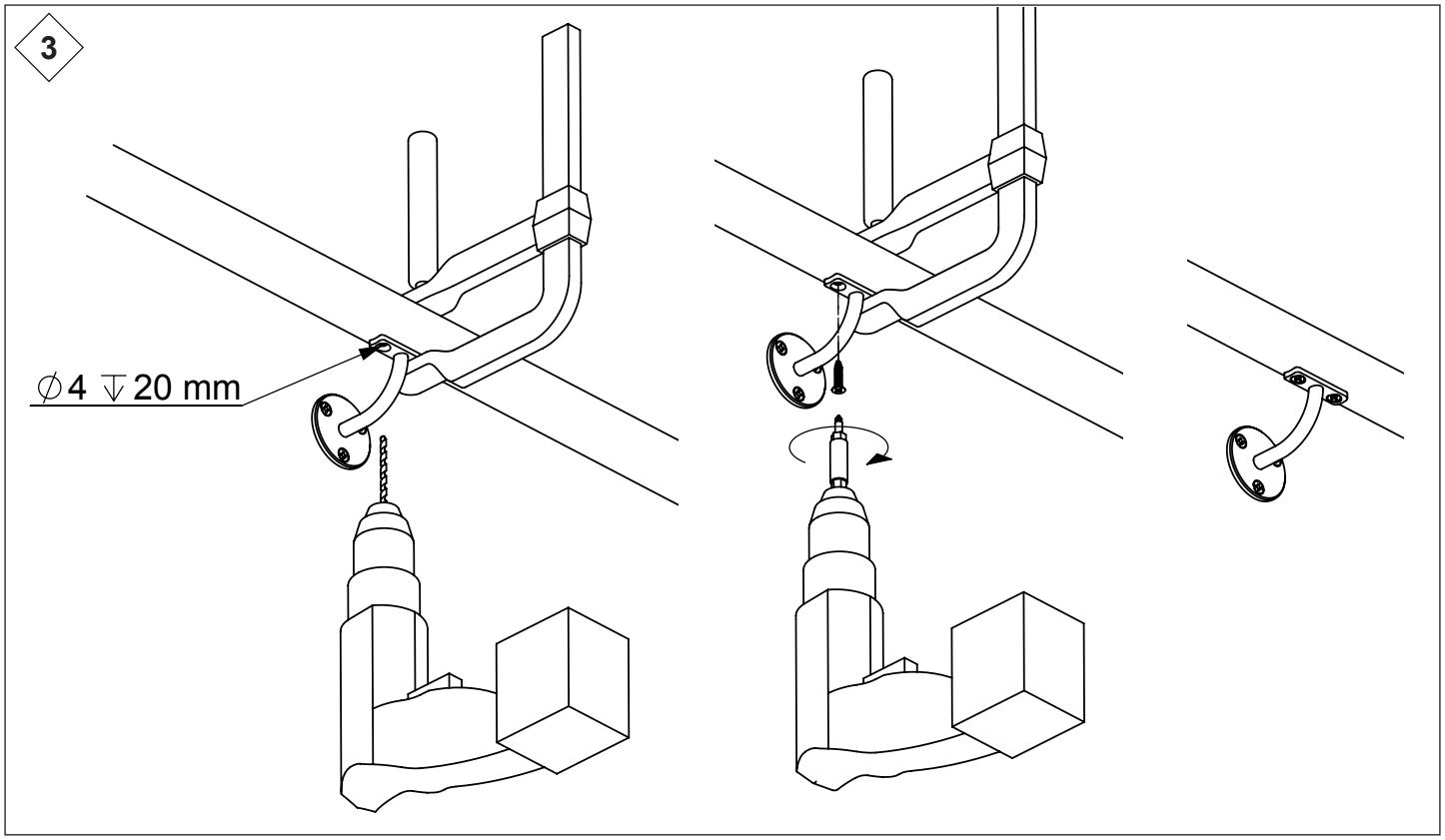
3
∅4 ↧20 mm

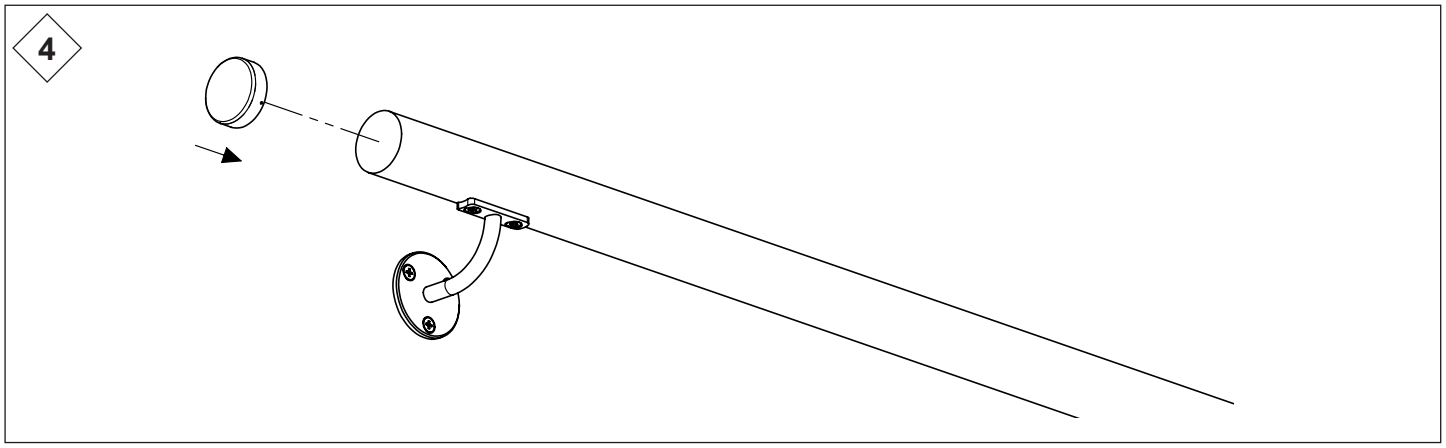
4

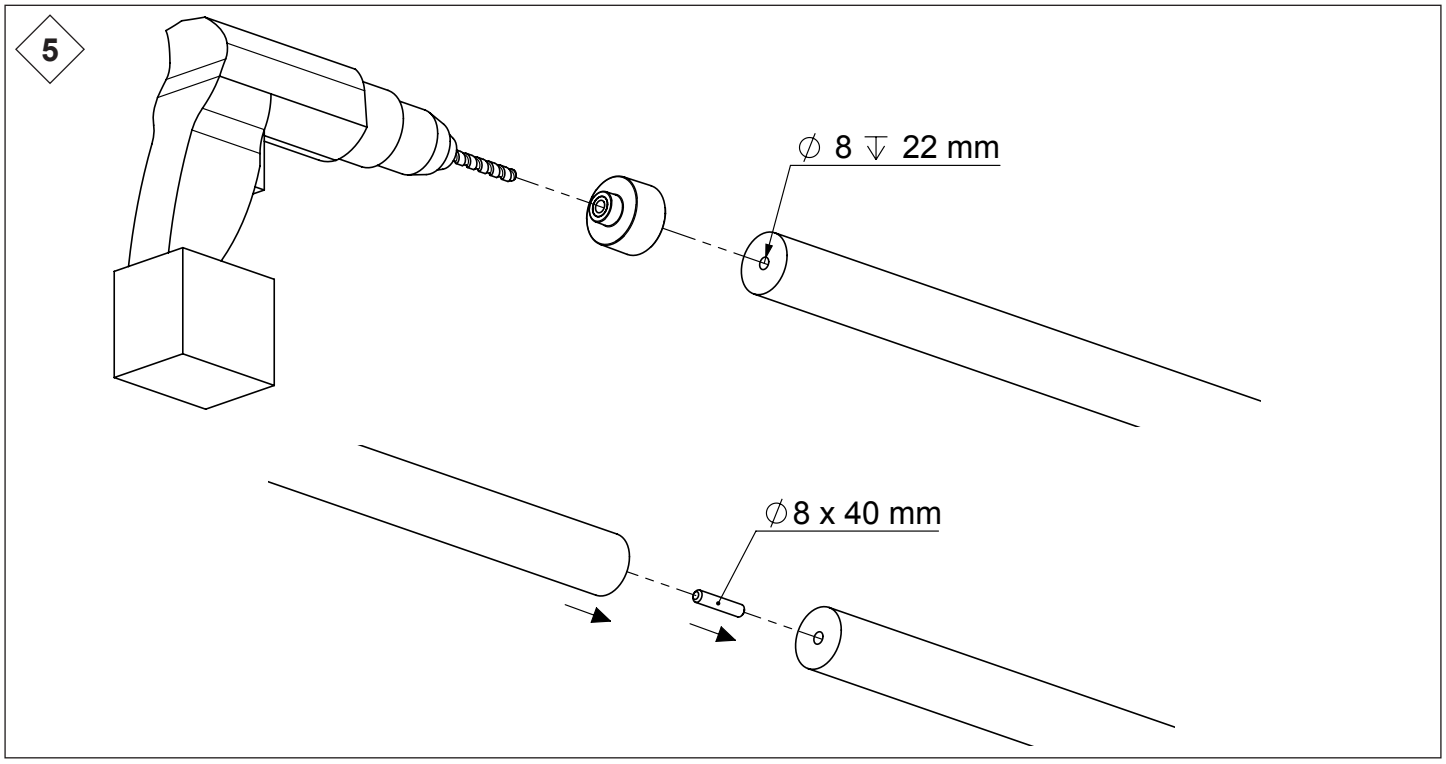
5
∅ 8 ↧ 22 mm
∅8 x 40 mm